:

:

:

2471-061

	Bar:	1.0	2.0	3.0	4.0	5.0
070 [1]	(l/min)	5.2	7.3	9.0	9.0	9.0
060 [2]	(l/min)	11.6	16.3	20.0	23.1	25.8

[1] USA: Flow restricted to 1.8 gpm (7.0 l/min)
[2] USA: Flow restricted to 1.8 gpm (7.0 l/min)

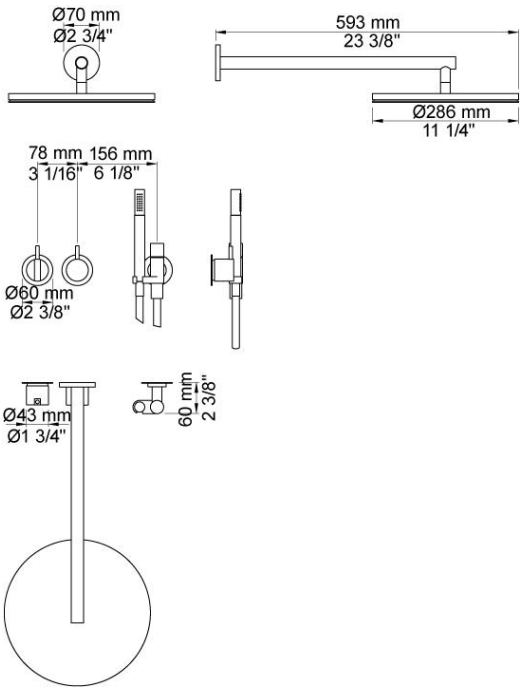

	Color 20, Brushed chrome
Color 02, Grey	Color 21, Carmine red
Color 04, Light blue	Color 25, Pink
Color 05, Orange	Color 27, Matt black
Color 06, Light green	Color 28, Matt white
Color 08, Yellow	Color 40, Brushed stainless steel
Color 09, Dark grey	Color 60, Black
Color 12, Mocca	Color 61, Brushed black
Color 14, Bright red	Color 63, Copper
Color 15, Dark blue	Color 64, Brushed Copper
Color 16, Polished chrome	Color 65, Gold
Color 17, Gloss black	Color 68, Silver
Color 18, White	Color 70, Brushed Gold
Color 19, Natural brass	

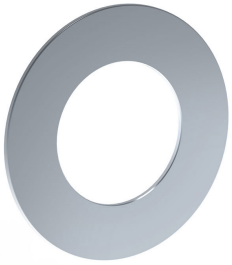

001
23/8" circular flange.

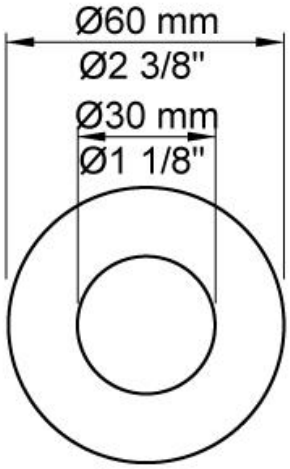

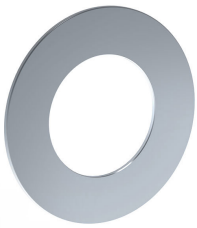

001G

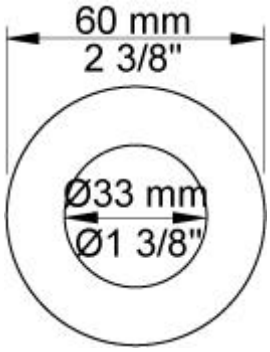

060

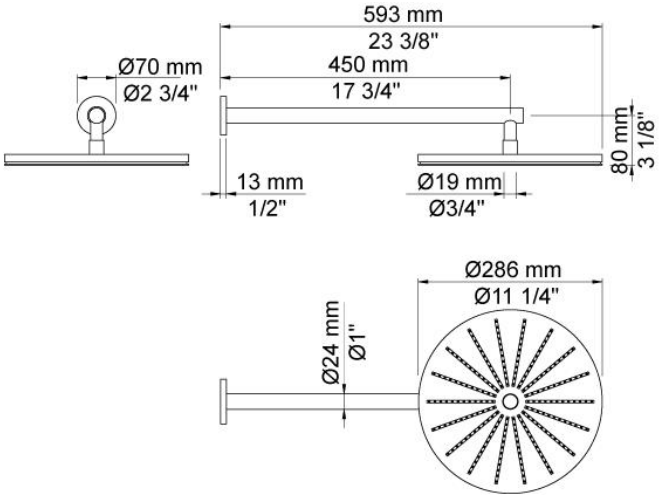

070
Hand shower and holder with non-return valve. Hand shower to the left.

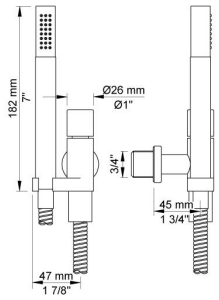

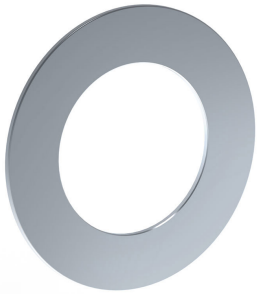

2001
23/8" circular flange.

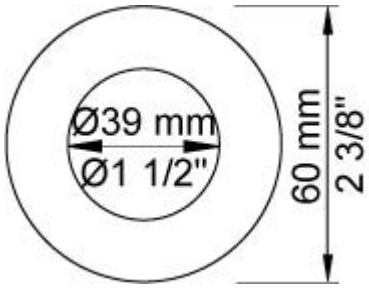

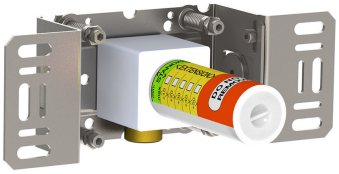

200M
Separate outlet socket. ½" connection NPT female inlets.

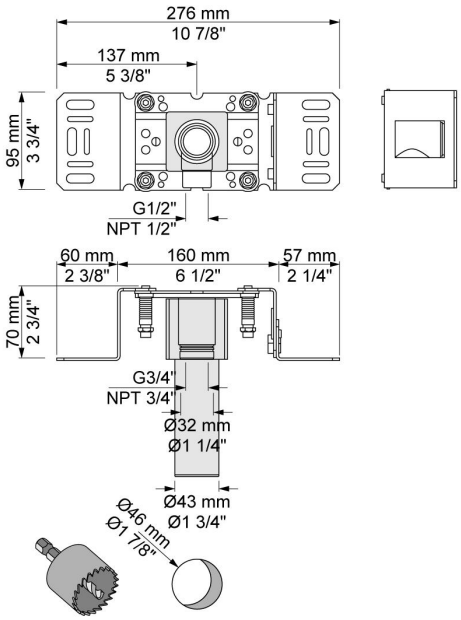

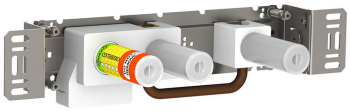

2400FV
One handle in-wall mixer for high flow, with diverter and one premounted outlet socket. ½" connection NPT female inlets and outlet.

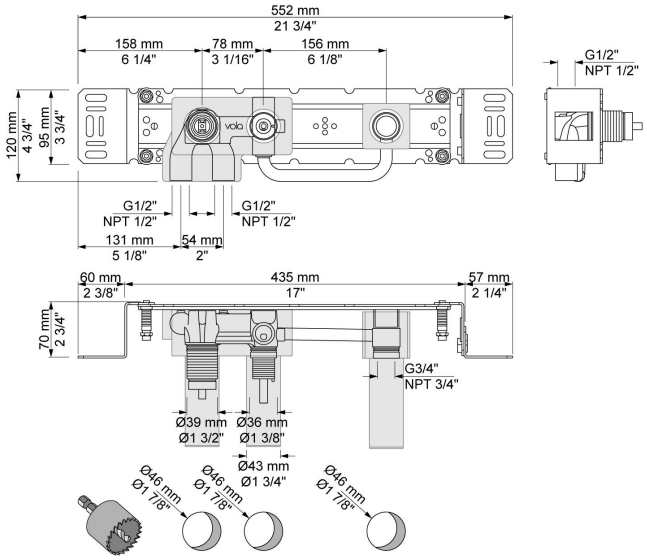

NR21
Operating handle for Vola 2100, 2200, 2300 and 2400.

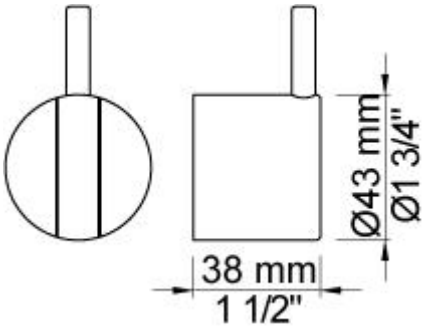
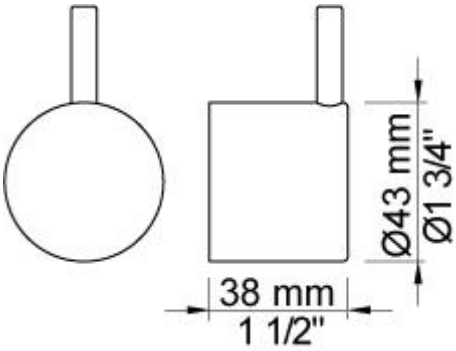
NR24G